American Sensing Inc (ASI)

Made in the USA

CRYOGENIC & HIGH TEMPERATURE PRESSURE TRANSDUCER

Model ASI 2055
Cryogenic & high Pressure Transducer

MODEL ASI 2055

FEATURES:

- Reliable cryogenic performance from -320 °F to 400°F (-196 °C to 200°C)
- Hydrogen and LOX compatible
- Isolated remote electronics via stainless steel armored flex tubing
- Standard accuracy to +0.3% FSO (Optional +0.1% FSO)
- Lightweight, all stainless steel construction (<10 oz.; 0.2 kg)
- Designed to meet high vibration and shock requirements
- Choice of 4-20 mA, 0-5 Vdc, 0-10 Vdc or optional digital output

APPLICATIONS:

- LNG pressures
- Aerospace propulsion systems
- Military and defense programs
- Liquid gas custody transfer
- Engine test beds

PRODUCT OVERVIEW:

The Model 2055 Series from ASI is a family of cryogenic and high temperature pressure transducers, offering consistent measurement accuracy in temperatures as low as -320 °F to 400°F (-196°C to 200°C). The Series features a lightweight, all stainless steel construction with choice of either 4-20 mA, 0 to 5 Vdc, or 0 to 10 Vdc output; or optional digital protocols. On-board isolated transducer electronics are remotely mounted via stainless steel armor jacketed flex tubing.

FIELD OPTIONS:

- 0 to 5 Vdc, 0 to 10 Vdc or 4-20 mA output
- RS232, RS485 and CAN outputs
- Zero and span adjustments
- Optional electrical connections

MODEL ASI 2055

DIMENSIONAL DRAWING

All dimensions are in inches (mm)

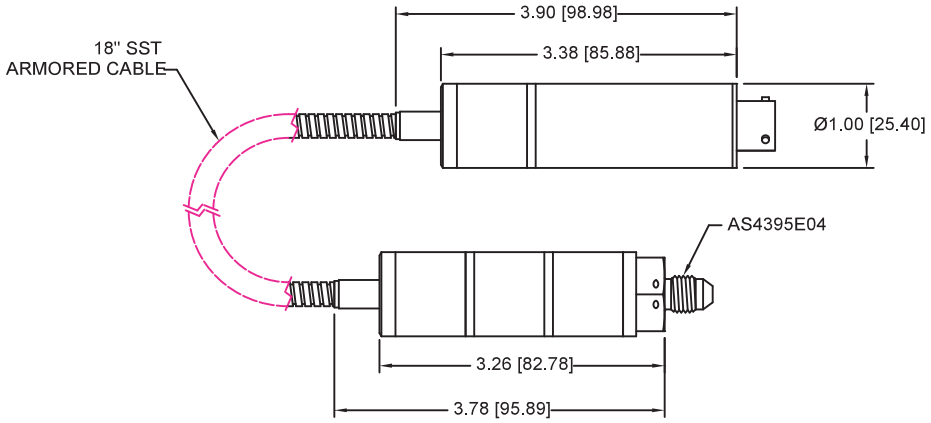

STANDARD WIRING

PIN	VDC	4-20mA
A/1	+EXC	+EXC/SIG
B/2	+SIG	N/C
C/3	-SIG	N/C
D/4	-EXC	-EXC/SIG
E/5	SHUNT (OPT.)	SHUNT (OPT.)
F/6	SHUNT (OPT.)	SHUNT (OPT.)

SPECIFICATIONS

ELECTRICAL

- Output Signal: 0 to 5 Vdc, 0 to 10 Vdc (3- and 4-wire isolated or non-isolated) and 4-20 mA
- Supply Voltage: 18 to 36 Vdc, 9 to 36 Vdc (unregulated)
- Response Time: 4 ms
- Connection: MIL PTIH-10-6P standard, options available
- Circuit Protection: Designed to meet *MIL-STD-461/462 EMI/RFI, some options will affect EMI/RFI rating

MATERIALS OF CONSTRUCTION

- Wetted Parts: 17-4 stainless steel (Optional Inconel and Hastelloy)
- Housing: 316 stainless steel
  Tubing 18" Flexible metal hose

ACCURACY (HYSTERESIS, NON-LINEARITY & REPEATABILITY @ +70 °F)

Static Accuracy (RSS)<±0.3% FSO, ±0.10% FSO
Non-repeatability: <±0.1% FSO
Hysteresis: <±0.2% FSO
Non-linearity: <±0.2% FSO

Please consult factory for your specific needs.

MECHANICAL

- Process connection: AS4395E04 pressure port
- O-Ring: Buna-N (Nitrile) is standard. For expanded temp ranges -65 °F to 350 °F Flourosilicone is standard.
- Proof Pressure: 1.5X range
- Burst Pressure: 2X range

PRESSURE RANGES

- Ranges 0 to 150 thru 0 to 5K PSIA or PSISG (10 thru 207 BAR)

THERMAL SPECIFICATIONS

- Compensated: 320°F to +400°F (-160°C to +200°C)
- Operating Temperature Range:
  Ambient: -40 °F to +185 °F (-40 °C to +85 °C)
  Process:-320 °F to +400 °F (-196 °C to +200 °C)
- Effect on Zero/Span:
  ±1.0% FSO/100 °F for ranges ≥1K PSI (69 BAR)
  ±2.0% FSO/100 °F for ranges <1K PSI (69 BAR)

Standard configurations shown.
Please consult factory for other options.

All specifications are for reference purposes only. In the interests of continuous product improvement, all specifications are subject to change without notice. Please contact ASI for assistance with your application.